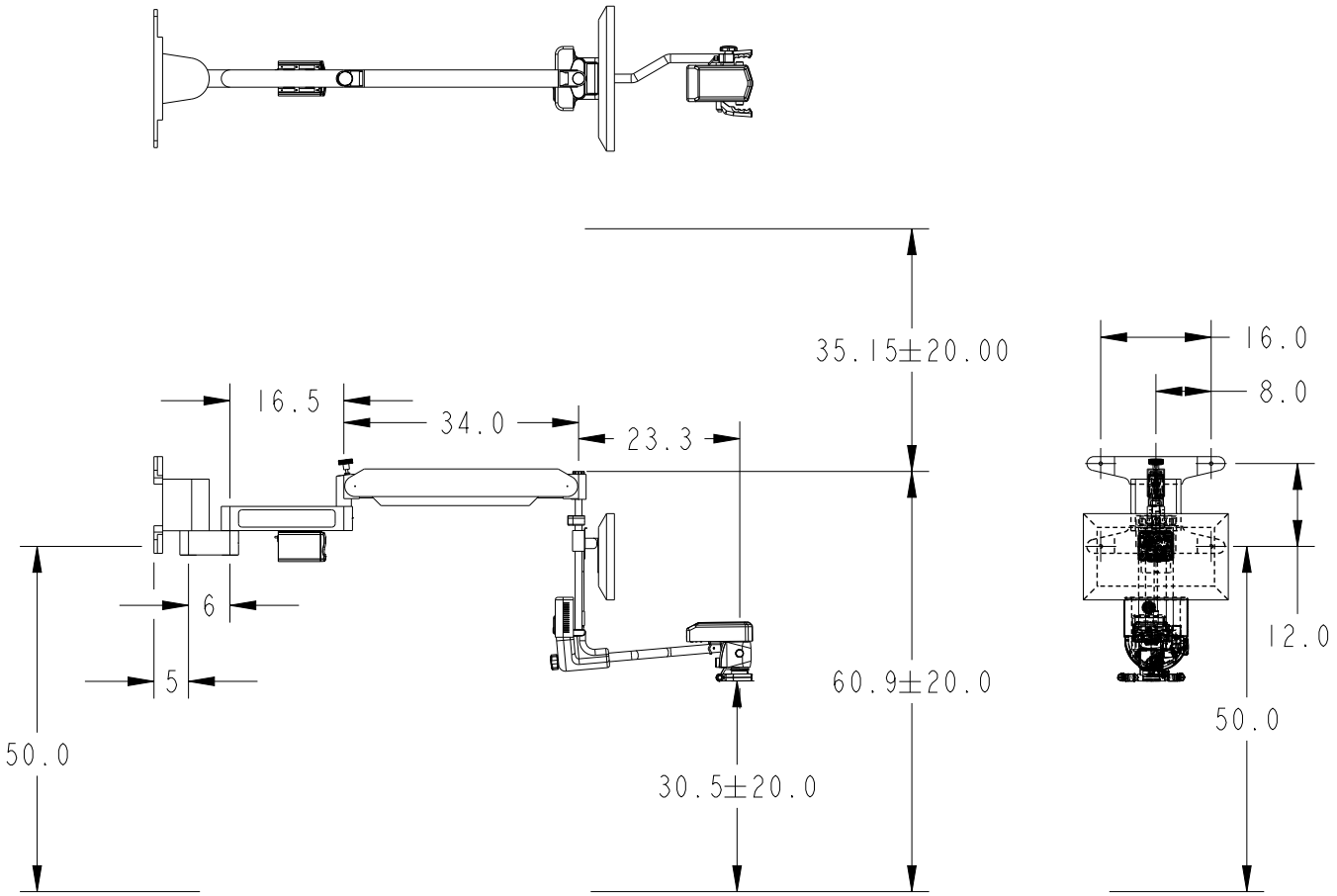
35.15±20.00
16.0
8.0
16.5
34.0
23.3
6
5
50.0
60.9±20.0
12.0
50.0
30.5±20.0